RALEIGH AMATEUR RADIO SOCIETY

RARS

WORLDWIDE FRIENDSHIP

DAVE LANGLEY, W4YDY/K4IWJ
EDITOR

TOM ALEXANDER, WA4OTA
ASSISTANT EDITOR

"Raleigh Amateur Radio Society News"

AUGUST 1972 ISSUE 34

MEET YOUR MEMBERS...

JOHN BARGAMIAN, K4VLI

August is a good month to talk about the weather, and naturally when that happens K4VLI comes to mind. John retired in 1968 from the US Weather Bureau, Raleigh-Durham Airport Station, where he had served as an electronics technician for some time. John's interest in ham radio dates back to the days of "King Spark" when he was first licensed in 1922 as 1CAS (no prefix in front of the 1). He was then living in Providence, Rhode Island, his home town. Since that time he has held a number of calls, among those being W1BGJ, W1OCX, W3IQC, K4AWQ, and K8GFQ. He is presently an advanced class licensee under the call sign K4VLI. John also holds First Class Telegraph and Telephone tickets and is a member of ARRL.

John prefers 20 and 40 meters where he operates his Swan 500CX on both sideband and CW. He and wife, Ena, married 39 years, live at 108 W. Aycock Street here in the city. His son, Joel, an air force vet, is employed at WRAL-TV, Channel 5, and his daughter, Mrs. Sandra Pace, marine corps vet, lives in New Jersey.

John's career in electronics has been a long and interesting one. He has served the Navy as a radar technician, the Department of Defense as a Quality Assurance Representative and even received a law degree from Georgetown University Law School in 1927. He received a commendation for outstanding work from Admiral Andrews, Commandant First Naval District, in 1928 and another from James Forrestal, Secretary of the Navy, in 1946.

John says that he belongs to the American Association of Retired Persons, but don't let him fool you. I think he retired young so that he could get out and have a good time.

---Tom, WA4OTA---

NEXT MEETING

The next monthly meeting of the RARS will be held Wednesday, August 2, at 7:30 pm. Jim Carroll, W4COM, will make a technical talk in the program portion of the meeting. He is employed by ITT. Lee, WA4ZNA, will have some important items to cover in the business portion concerning the sports car rally, the club FM repeater, the club picnic, and a number of other subjects that will be interesting to all. Members will sign up for keyer parts. It's on again! This one is the final list.

The meeting will be held at the Civil Defense Headquarters in the basement of the NC State Government Administration Building, 116 West Jones Street. Ample parking is available at the rear of the building. Please enter thru the back door. Everyone interested in amateur radio is invited.

HAM RADIO magazine had an interesting and possibly frightening editorial in their July issue. It concerns the increase of some amateurs that operate their 2 meter FM walkie-talkies on commercial airlines. The Federal Air Regulations (Para. 91-19) states that no electronic device may be operated aboard a commercial airliner except heart pacemakers, voice recorders, hearing aids, electric shavers and electric watches, unless approved by the air carrier or operator. The captain of the aircraft does NOT have the authority to authorize such operation. But if the airline did approve your application, you still have to have the captain's approval. Don't put the captain in a bad position by asking him to let you operate when you don't have approval of the airline.

The modern airliner has equipment for communication and navigation in several different frequency ranges. Some of these include 108 to 136 MHz, 300 MHz area, and the 1000 MHz area. Interference to some of these frequencies could easily cause a fatal accident. FM broadcast receivers are thought to be the cause of two aircraft accidents. It would be a big blow to amateur radio to be blamed for an accident. The editor of one amateur magazine has written of his experiences while operating from an airliner flying across the country. I don't know if he had the airlines approval or not, but he did have the captains approval. It's great to have an antenna at 35,000 feet. I'm sure he would not have done it if he had known of the possible results.

If I were in an airliner, I would not be comfortable knowing an FM rig was being operated and it had not been checked out by the airline, In the take-off and landing phases, it could be very dangerous. True, the chances of amateur equipment causing trouble of this type are very slim, but would you want to be on the aircraft if it did happen?

FATHER OF RARS MEMBER PASSES AWAY

W. C. "Buck" Wilson passed away on July 1 at the age of 73 in Oxford. He was the father of Jim, WB4HAL, a member of the RARS. The RARS expresses its sorrow to Jim and others in Mr. Wilson's family.

PUBLISHED BY RALEIGH AMATEUR RADIO SOCIETY, INC., P. O. BOX 17124, RALEIGH, N. C. 27609 ■ ADVERTISING MANAGER – PAUL BROWN, WN4PZW; TECHNICAL EDITOR – BERT BAILEY, W4FMN ■ OFFICERS: PRESIDENT – LEE JOHNSON, WA4ZNA; VICE PRESIDENT – TOM MARTIN, K4CQJ; SECRETARY – CHUCK LITTLEWOOD, W4RUH; TREASURER – BILL McDOWELL, K4CIA. ■ PRINTED BY QUIKCOPY, RALEIGH, NORTH CAROLINA.

MINUTES OF RARS MEETING HELD JULY 5, 1972

President Lee Johnson, WA4ZNA, called the regular meeting to order at 7:40 pm at the Civil Defense Headquarters in the NC State Administration Building. Several guests were recognized.

Lee introduced Bowie Gray of the Tarheel Sportscar Club who spoke of the communications requirements of their road rally the night of August 19. Six mobiles and one base station unit are needed for operation on 2 meter FM over a five county area using the repeaters. The FM committee and the advisory board will work out the details. If you can help contact Lee Johnson.

Bert Bailey, W4FMN, Emergency Coordinator for Wake County, gave us a report of the June 15th emergency exercise. Amateur Radio communications proved to be one of the most successful aspects of the exercise. It was shown that all services needed to improve their coordination and training to be better prepared. Bert thanked all the club members and Holding Tech. students who manned the stations at the three local hospitals.

Ed Alderman, WA4PEN, spoke of the loss to the radio amateur community of Jim Reid, W4BKL. All present observed a few moments of silence in his memory.

Dean Straw, WB4YOJ, field day chairman, gave us the report that in the three transmitter catagory RARS made over 2000 contacts under somewhat poor propagation conditions. Thanks go to Dean, Bill McDowell, and the many others who contributed their time and equipment.

Lee announced that the club order of 2 meter crystals has arrived and that those having crystals coming contact Dave Thomas, K4SAN. The RARS FM group will not meet until September due to the many other summer activities.

John Wittman will head up the club keyer project and present a progress report at the July advisory board meeting.

Tandy Way, K4YSN, commended Danny Hampton, K4ITL, and Chuck Littlewood, W4RUH, for their personal assistance in he and his wife's recent automobile accident. Fortunately, there were no serious injuries.

After the coffee break, Bill Wehling, a veteran helicopter pilot of the Vietnam conflict, showed slides and shared his experiences with us. Bill, who works for the Mobile Home Center in Raleigh, and Bert Bailey, W4FMN, were responsible for providing a large mobile home for our field day use. President Lee presented Bill with a certificate of appreciation on behalf of the club for his presentation and contribution to RARS.

The meeting was adjourned at 10:10 pm.

Respectfully submitted,
Chuck Littlewood, W4RUH
Secretary, RARS

SANTA CLAUS COMES TO RARS IN JUNE YET

Racking up 2100 QSO's in FB in any league. We Hope it stands up amidst Field Day scores across the country this season. However, there were equally high scorers working fer RARS. These FB citizens were Messrs. Williamson and Chipman, system supervisor and assistant for the Mobile Home Center just south of Raleigh on 401S or Wilmington Street (east side of 2 lane Highway). In a real spirit of civic cooperation, they donated the use of one of their finest models, a 12' x 60' beautiful mobile home for RARS use during Field Day. Setting it up after driving thru heavy Raleigh traffic at 5 pm on Friday would tax the nerves of angels. But Mobile Home Center did it with smiles. Before someone calls "Foul!" let me add that no power was connected; RARS abided by all rules, using a generator and all that gud stuff. But as many of us learned in military social circles, one does not have to train to be miserable. So our rifles es radios were in top shape wid our own effort but we did have a pretty doggone nice roof over our helmets. Talk about the rig lineup! Dean in one bedroom with his 20m rig, John in the -------- Kitchen with his 15m gear, es Brad with the Novices QSOing around the world from the living room really presented a sight fer sore eyes at 3 am. But there they were, to include our beloved prexy, Lee, sacked out full length on the living room couch. I know he was beat but what comfort in that outstanding QTH/mobile. A megahertz of thanks to Raleigh's newest home vendor, the Mobile Home Center.

--- Bert, W4FMN ---

RARS AMATEURS ASSIST HIGHWAY PATROL

At about 12:30 am on July 5, a violent thunderstorm moved through the Wake County area. Bill Grimes, WB4AXH, was monitoring the Highway Patrol radio and noticed that the Raleigh base station was having trouble hearing the troopers out on the road in the Smithfield area. Bill heard Ed Alderman, WA4PEN, in QSO with W4YDY/mobile on 146.94 MHz. Bill called Ed and explained the situation. Ed called the Highway Patrol radio station on the telephone and the traffic from the troopers was passed on. Another example of public service and amateur radio.

FOR SALE

Viking 2, VFO, Mike, HQ-105 -- all for $150. Don Adams, Highway Patrol Station.

THIRD PARTY TRAFFIC

The medical relief ship S.S. hope is now in Jamaica, and an agreement has been reached with that Government to permit third-party traffic handling by amateurs for purely personal messages of ship personnel to family and friends back home.

Guyana and the US have completed a third-party amateur message handling agreement effective 30 days after it's signing on June 6.

GOVERNOR SCOTT SALUTES INDIANA CITY VIA AMATEUR RADIO

On July 5, 1972, Governor Bob Scott congratulated Flora, Indiana on their centennial celebration being held July 2-8. He sent a radiogram to the mayor via amateur radio wishing them another 100 years of progress. The message was originated by W4YDY in Raleigh and passed on to WB9EAY in Indiana on 7297 kHz at 11:30 am. WB9EAY relayed the message to K9EFY on the Indiana Traffic Net on 3910 kHz later in the day. The message was posted at the fairgrounds in radiogram form during the celebration.

FOR SALE

Viking II = $40 - Brian Wittman, WB4PMI. Telephone 782-1746.

JIM REID REPEATER ASSOCIATION

Arepeater association has been organized in Raleigh, N.C. in memory of Jim Reid, W4BKL. Jim was very interested in all phases of amateur radio and one of his interests was 2 meter FM and the K4ITL repeater on top of the BB&T building in Raleigh. He was a vice president of BB&T. Several amateurs in North Carolina have expressed interest in the association. A group of amateurs met in July, organized the association, approved by-laws, elected officers and made application to the FCC for W4BKL. If the call is approved by the FCC, the repeater on the BB&T building will become the W4BKL repeater.

To join and support the association, there is a $5 initiation fee and $1 dues per year. Other dues can be voted on by the members. Presently, the only expenses will be the license fees, expenses for organizing and supporting the autopatch on the repeater. If enough amateurs join up, dues should be well under $5 per year with an open autopatch. Presently there is only enough money to operate the autopatch for about six months. If only a few support the patch, it might have to change to a coded access. Equipment is already on hand for this. Phone line fees will run about $15 per month.

Any amateur interested in joining the Jim Reid Repeater Association may contact any officer of the club. Officers are: President-Danny Hampton, K4ITL; Vice-president - George Wallace, WB4PNR; and Secretary/Treasurer-Jim Johnson, W4JUG. The address is P. O. Box 26113, Raleigh, N. C. 27611.

LIGHTNING STRIKES ONCE?

Lightning put the RARS repeater out of business for a while. On Sunday evening, July 16, lightning hit the QTH of Ed Alderman, WA4PEN, and damaged the receiver, control equipment and control lines of the repeater. Control lines run to the QTH of Lee Johnson, WA4ZNA, where the transmitter is located. They were disintegrated where they entered Ed's window. Also Ed had a lot of damage to his equipment. The AC plug to the six meter transceiver disappeared, the coax was blown out of the tranceiver, and a Dycmmm amplifier was damaged. Hopefully there was not too much more damage. On July 18, there was an article in the "Raleigh Times" about the RARS. There was a nice picture of Ed's "before station".

STAN THE MAN

As predicted 2 newsletters ago, WN4ZTF is now a general, less stars. After snagging his novice on 25 April, Stan Grady at Holding Tech captured his general class on Thursday, July 6. That's real QSYing. We all look forward to this ham's contributing much to hamdom; after he graduates from Holding, he expects to be working in the Raleigh area. RARS will gain mucho de db with this fine exponent of service to the community and fellow man, especially hams. Congratulations once again, WA4ZTF, WB4ZTF, whatever you are (check the next callbook). I understand his next worthy goal is to go AIRBORNE, ALL THE WAY, with Donnie.

--- Bert, W4FMN ---

CD CRITIQUE OF 14JUNE DISASTER EXERCISE

Attended the critique at 1930 hours at the County Courthouse with Chief Kelly of the Wake County Sheriff's Office; Col. Thorne, CD County Director; Pete Chenery of the County Red Cross; and others active in emergency operations in Wake County. Problems were discussed as were possible solutions. All were impressed with RARS participation. Several statements were made to the effect that the only commo available was ham radio. At several QTH's messages properly transmitted and received were not routed to the individual most involved. Such errors could not be attributed to radio oprs but they do show users of accurately transmitted commo do need increased training and experience. CAP and RARS continue their cooperation in transmitting messages to local hospitals. Chief Kelly has offered part of his van to house ham operations at the disaster scene. Much coordination remains to be done but progress is being made. At the suggestion of several RARS members at the local beanery attended after the last RARS meeting and in accord with the recommendation of Pete Chenery at the CD critique, letters are being dispatched to list the availability of the County EC, Ass't. EC and other RARS members of RACES to assist in emergencies. It appears there is always someone who doesn't get the word. The ever-libbing newspaper is not enough. Maybe letters won't be the final action, e.g. telephone numbers do change, but in any case, more people will now hear of RARS.

--- Bert, W4FMN ---

AUTOPATCH PER W4YDY

It seems like one of the hottest items these days is the autopatch on some 2 meter repeaters. It's about the handiest device to come along since the Model T! I have been asked dozens of times where I got the schematic for my touch tone pad. It came from QST with modifications. I never have the exact values for parts! In mine, both capacitors are 5 mfd., and a 1 megohm resistor was added between the output and the HR-2A mike line for isolation. A DPDT switch was added to disconnect the output and the battery, although it only draws current when a button is pressed. Some pads draw current all the time. The pad is mounted in a 4 x 4 x 2 mini-box, with the mike being plugged into the box. The output is plugged into the HR-2A mike input. The basic schematic is shown and it can be wired to fit your own needs.

It's a big thrill to be riding down the highway, call K4ITL on the autopatch and he answers the phone with "Garbage Dump" or "Joe's Bar". I should have known he was listening.

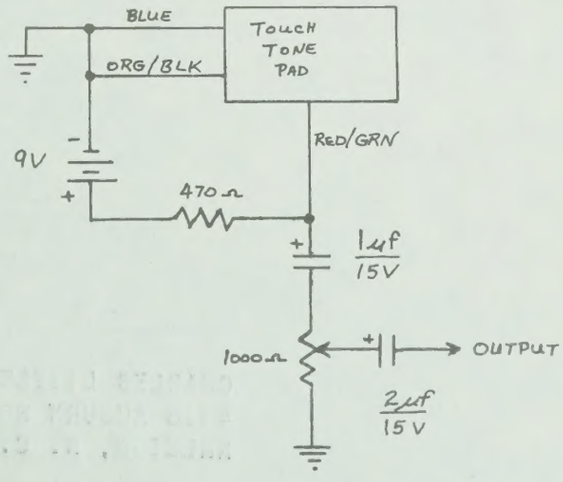

****

SPECIAL THANKS TO MOBILE HOME CENTER

ON HIGHWAY US 401S OF RALEIGH FOR

LOAN OF A 12 x 60 MOBILE HOME TO THE

RARS FOR FIELD DAY USE.

****

Put your mobile rig in a new Toyota
from
GOODMAN TOYOTA
2401 Wake Forest Road 833-7591

Let your friend and mine, WB4PNR, Power Vacuum your ductwork, flue, blower, etc. FB rates.
ALLIED POWER VAC
772-7363

RARS MEMBERS DOING NICELY AFTER SICKNESS

A RARS member was stricken in late June with a heart condition and entered the hospital for awhile. Bill Smith, K4DOC, is doing much better and hopes to be back in normal circulation before too long.

Bob Morris, W4KXW, is doing much better since he returned from a month long stay in the hospital. He returned to work part-time in July and he said it was great to be out and around again. He hopes to see everyone at the club meeting in August.

RARS CALENDAR OF EVENTS

August 2 . . . . . Regular meeting
August 15 . . . . . Executive & Advisory Committee meeting
September 3 . . . . . Shelby Hamfest
September 6 . . . . . Regular meeting
September 9-10 . . . . VHF QSO Party
September 19. . . . . Executive & Advisory Committee meeting
October 4 . . . . . Regular meeting
October 17. . . . . Executive & Advisory Committee meeting
October 28-29 . . . . . CQ WW DX CW Contest
November 1 . . . . . Regular meeting
November 11-12 . . . . ARRL Sweepstakes
November 14. . . . . Executive & Advisory Committee meeting
November 18-19 . . . . ARRL Sweepstakes
November 25-26 . . . . CQ WW DX CW Contest
December 6 . . . . . Regular meeting
December 19 . . . . . Executive & Advisory Committee meeting

RARS 2 METER FM NET --- MONDAY NIGHTS AT 8:00 PM --- 146.94 MHz

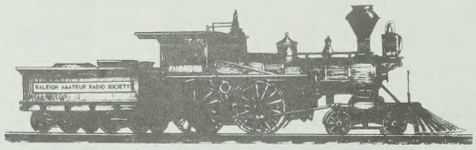

Toot! Toot!

RALEIGH AMATEUR RADIO SOCIETY, INC.
POST OFFICE BOX 17124
RALEIGH, NORTH CAROLINA 27609

YOUR INSURANCE
AGAINST DISASTER
CIVIL DEFENSE

RALEIGH JUL 26 '72 N.C. PB METER P.B. 875636 U.S. POSTAGE .08

CHARLES LITTLEWOOD
4916 AUBURN RD.
RALEIGH, N. C. 27609